FINN®

SMARTER WAYS TO WORK™

2021

Product Catalog

HydroSeeders®

Material Blowers

Straw Blowers

Ground Preparation Attachments

HydroSeeder Sub-Frames

More Jobs. More Profits. **More Success.**

For more than 85 years, FINN has been providing quality equipment to the landscape and erosion control industries and is your number one solution for environmental stewardship. Our machines are known for productivity, reliability, and long lasting product performance. Our company is known for innovation, dependability, and industry leading product support.

We pride ourselves on manufacturing products that give you the ability to work more profitably by completing more jobs for less cost than ever before. We think it's a **Smarter Way To Work.**

Today, FINN Corporation has a worldwide presence with more than 175 North American dealer and service locations, plus others in Australia, South America, Africa and Europe. Even as our network continues to expand, we will not forget our humble beginnings and our Midwestern roots.

Table of contents

HydroSeeders® 4-6
Landfill Solutions 7
Material Blowers 8-9
Straw Blowers 10-113
Ground Preparation 12-14
HydroSeedeer Sub-Frames / Warranty 15
How to find a dealer . . . . . back cover

TITAN HT 330/400

Tier IV Final

HydroSeeder®

The new Titan HydroSeeders® provide more performance, more power and more productivity than ever before. Designed to improve overall user experience and outperform all other units with ease, the Titan provides the unique features demanded by industry experts and required to meet today's challenging applications.

Features and Benefits

- Spraying distance up to 368 feet with Finn Longshot® Nozzle
- Dual booms as an option for spraying on both sides of the unit for hard-to reach areas
- Hydraulic hose reel with Reel-In and Reel-Out functionality
- Integrinder® bale grinder for faster and more efficient loading

- Helical designed agitators optimizes material movement within the tank for more efficient mixing and circulation
- Long-life, low maintenance agitator bearings
- Interchangeable centrifugal and vortex pump
- Centralized lubrication/service points for increased unit serviceability
- Larger gates and open-space design dramatically increases the amount of usable storage space on top of the tank
- Remote control seamlessly integrated into the unit control system to easily control the pump while working with the hose

Innovative multi-lingual control system digitally manages all key system functions

Sturdy, steel-stiffened, larger deck with tie downs

Patent Pending Water Curtain reduces dust during loading.

Robust, Long-life, Agitator bearings tested to over 700 continuous hours.

Patent pending agitators with shredding paddles improve mixing and auto-reverse when jams are detected

Tier 4 Final engine with hydrostatic drive provides noise reduction and less vibration for operator

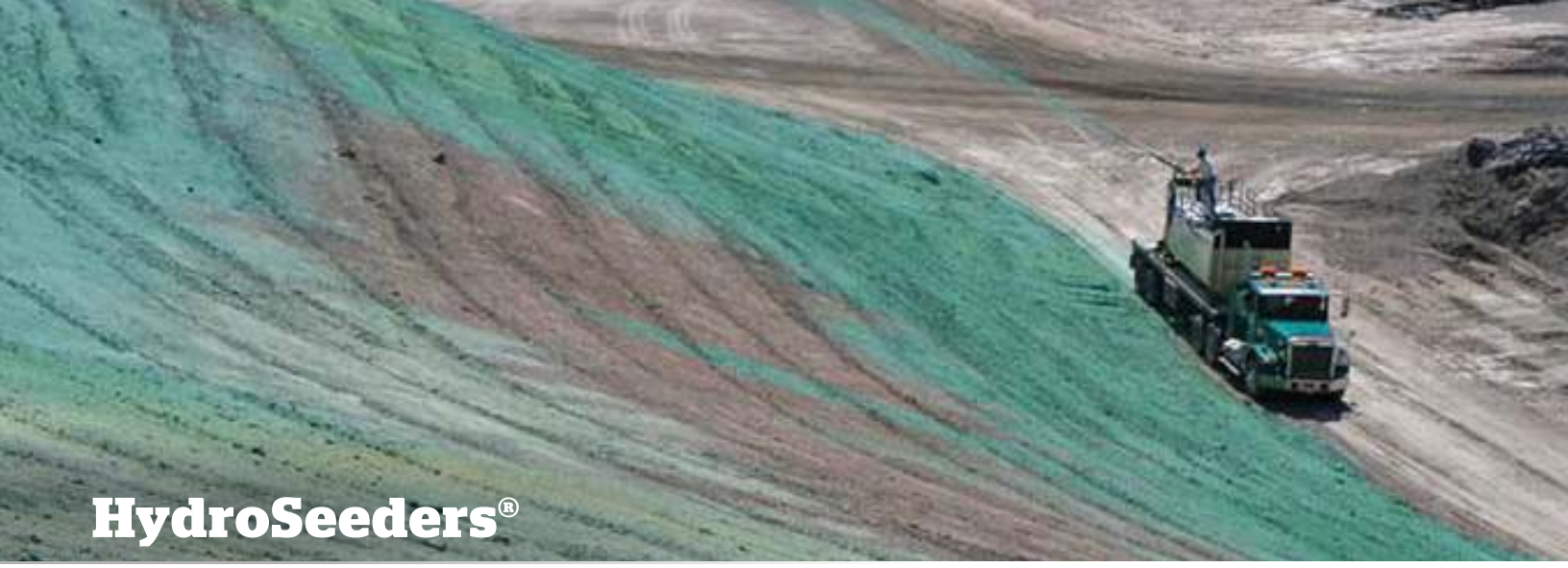

HydroSeeders®

FINN invented the HydroSeeder® in 1953 creating a new industry of turf and erosion control contractors. Hydroseeding is far more efficient than broadcast seeding or installing sod. It speeds the seeding process, saving time, labor hours and money. And the results are lush, thick grass beds that establish quickly.

FINN HydroSeeders are robust, commercial grade equipment that use reversible, paddle agitation to enhance the loading, mixing and discharge operation. They are engineered for safety, operator convenience and efficiency. Each is designed to spray all commercially available hydromulching products. A wide variety of options are available depending on the model selected. See your FINN Dealer for details.

TITAN HT 330/400

Tier IV Final

Skid Mount Only

Loads per Acre	**HT330:** 1* **HT400:** 0.82*
Working Weight	**HT330:** 40,677 lbs. (18,451 kg)** **HT400:** 46,935 lbs. (21,289 kg)**
Power	John Deere 4045HFC06 Tier 4 Final Diesel, 173 HP (129 kW)
Tank Size	**HT330:** 3,000 gal. (11,356 L) work cap. / 3350 gal. (12,681 L) liquid cap. **HT400:** 3,600 gal. (13,627 L) work cap. / 3,975 gal. (15,047 L) liquid cap.
Pump	**Centrifugal:** 6" x 3" (15.2 cm x 7.6 cm), 530 gpm @ 200 psi, 1.25" solid clearance **Vortex:** 6" x 3" (15.2 cm x 7.6 cm), 465 gpm @ 150 psi, 3" solid clearance
Discharge Distance	**Centrifugal:** Up to 368 ft. (112m) from discharge tower **Vortex:** Up to 284 ft. (87m) from discharge tower

HydroSeeder Disclaimers

* Based on 1500 lbs. per acre.

** Working weight includes one full load of fiber mulch and water with no stored materials on deck.

T330

Tier IV Final

Skid Mount Only

Loads per Acre	1*
Working Weight	42,800 lbs. (19,415 kg)
Power	John Deere 4045FC04 (4.5L) Industrial Water Cooled Engine 134 hp (100 kW) Tier 4 Final Diesel
Tank Size	3,000 gal. (11,356 L) work cap. / 3,350 gal. (12,681 L) liquid cap.
Pump	5" x 2.5" (12.7cm x 6.4cm) 400 gpm @ 130 psi, 1" (2.5cm) solid clearance
Discharge Distance	Up to 230 ft. (70m) from discharge tower

T170

Tier IV Final

Skid Mount Only

Loads per Acre	2*
Working Weight	24,300 lbs. (11,022 kg)
Power	Cummins QSF 2.8 Diesel Tier 4F, 65hp (48 kW)
Tank Size	1,500 gal. (5,678 L) work cap. / 1,750 gal. (6,625 L) liquid cap.
Pump	Centrifugal 4" x 2" (10.2 cm x 5 cm), 320 GPM @ 115 psi (1,210 lpm @ 792 kPa), 1" (2.54 cm) solid clearance
Discharge Distance	Up to 200 ft. (61m) from end of the tower

T120T/ T120S/T120GN

Tier IV Final

Available as Straight Pull Trailer, Gooseneck Trailer, and Skid Mount

Loads per Acre	3*
Working Weight	**T120T:** 17,900 lbs. (8,119 kg) **T120GN:** 18,730 lbs. (8,496 kg) **T120S:** 16,300 lbs. (7,394 kg)
Power	Yanmar 3TNV88C-DYEM, 35.1hp (26.2 kW), 3 cylinder water-cooled diesel engine (Tier 4 Final)
Tank Size	1,000 gal. (3,785 L) worki cap. / 1,180 gal. (4,468 L) liquid cap.
Pump	Centrifugal 4" x 2" (10 cm x 5 cm) 170 gpm @ 100 psi (689 kPa) (646 lpm @ 7 kg/cm2), 3/4" (1.9 cm) solid clearance, adjustable
Discharge Distance	Up to 180 ft. (55m) from end of the tower

T90T / T90S

Tier IV Final

Available in Trailer or Skid Mount

Loads per Acre	3.75*
Working Weight	**T90T:** 15,115 lbs. (6,856 kg) **T90S:** 13,455 lbs. (6,103 kg)
Power	Yanmar 3TNV88C-DYEM, 35.1hp (26.2 kW), 3 cylinder water cooled diesel engine. Tier 4 Final.
Tank Size	800 gal. (3,028 L) work cap. / 940 gal. (3,558 L) liquid cap.
Pump	Centrifugal 4" x 2" (10 cm x 5 cm) 170 gpm @ 100 psi (689 kPa) (646 lpm @ 7 kg/cm2), 3/4" (1.9 cm) solid clearance, adjustable
Discharge Distance	up to 180 ft. (55m) from end of the tower

T75T / T75S

Gasoline Engine

Available in Trailer or Skid Mount

Loads per Acre	4.29*
Working Weight	**T75T:** 9,990 lbs. (4,541 kg) **T75S:** 9,190 lbs. (4,177 kg)
Power	Kohler CH730, 23.5 hp (17.5 kW), 2 cylinder, OHV, air cooled, gas
Tank Size	700 gal. (2,650 L) work cap. / 820 gal. (3,100 L) liquid cap.
Pump	Centrifugal 3" x 1 1/2" (7.5 cm x 3.75 cm), 65 GPM @ 75 psi (245 lpm @ 5.3 kg/cm2), 3/4" (1.9 cm) solid clearance, adjustable
Discharge Distance	up to 90 ft. (27m) from end of the tower

T60T / T60S

Gasoline Engine

Available in Trailer or Skid Mount

Loads per Acre	6*
Working Weight	**T60T:** 7,770 lbs. (3,525 kg) **T60S:** 7,170 lbs. (3,253 kg)
Power	Kohler CH730, 23.5 hp (17.5 kW), 2 cylinder, OHV, air cooled gas
Tank Size	500 gal. (1,890 L) work cap. / 600 gal. (2,270 L) liquid cap.
Pump	Centrifugal 3" x 1 1/2" (7.5 cm x 3.75 cm), 65 GPM @ 75 psi (245 lpm @ 5.3 kg/cm2), 3/4" (1.9 cm) solid clearance, adjustable
Discharge Distance	Up to 90 ft. (27 m) from end of discharge tower

T30

Gasoline Engine

Skid Mount Only

Loads per Acre	10.68*
Working Weight	4,560 lbs. (2,068 kg)
Power	Kohler CH620 19 hp (14.2 kW), electric start, air cooled gas
Tank Size	281 gal. (1,063 L) work cap. / 335 gal. (1,268 L) liquid cap.
Pump	Centrifugal 3" x 1 1/2" (7.5 cm x 3.75 cm), 65 GPM @ 60 psi (227 lpm @ 414 kPa), 3/4" (1.9 cm) solid clearance, adjustable
Discharge Distance	Up to 70 ft. (23 m) from end of hose

FINN Landfill Solutions®

The LF120 HydroSeeder® is the most efficient and effective solution for applying Alternate Daily Cover (ADC). For the challenging conditions of a landfill, FINN has protected the engine and components from debris with the addition of special guards and skid plates; high clearance, heavy-duty tandem 10,000 lb. rubber torsion axles, along with tubeless high flotation tires for maneuvering on uneven surfaces; and an extended and reinforced trailer tongue for towing behind any piece of heavy equipment.

Designed specifically for use in landfill environments, the LF120 can also be used to apply products for dust control, erosion control and revegetation. FINN landfill units are also available in larger tank sizes if desired.

LF120

Power	Yanmar 3TNV88C-DYEM, 35.1 hp (26.2 kW) 3-cylinder water cooled diesel engine, Tier 4 Final.
Working Weight	18.3777 lbs. (8.336kg)*
Tank Size	1,180 gallon (4,468 liter) liquid capacity, 1,000 gallon (3,785 liter) working capacity
Pump	Centrifugal 4” x 2” (10 cm x 5 cm) 170 gpm @ 100 psi, (646 lpm @ 7 kg/cm2), 3/4” (1.9 cm) solid clearance, adjustable
Discharge Distance	Up to 180 feet (55 m) from end of discharge tower

Landfill Solutions Disclaimers

* Working weights are approximate and do not include options or stored materials.

Material Blowers

Enhance your profits with a FINN Material blower. With a FINN material blower your workers can increase productivity by as much as 700%. Free up labor hours to take on more jobs at a higher margin and reduce worker fatigue at the same time. Plus, the even application of mulch through a FINN material blower results in material savings of up to 40%.

These machines are ideal for delivering materials to hillsides, rough terrain, and hard to reach places and they can handle spreading, bark, mulch, soil, compost, over seeding and a wide variety of other materials. FINN material blowers are among the most versatile equipment you will own. Put these labor savers in your fleet and watch your profits soar.

MBX10 / MBX16 / MBX22

Tier IV Final

Skid Mount Only

Capacity	**MBX10:** 10 cubic yd. (7.6m^3) **MBX16:** 16 cubic yd. (12.2m^3) **MBX22:** 22 cubic yd. (16.8m^3)
Application Rate/Hour	Two operators: 22 Cubic yards/hour
Hose Reel Capacity	Up to 300 ft. (91.4 m) of 4 in. (10.2 cm) hose or up to 200 ft. (61 m) of 5 in. (12.7 cm) hose
Power	John Deere 4045HFC04 Tier 4 Final Diesel, 134 HP (100 kW), industrial water cooled diesel engine. Vibration Isolated. Control panel with multi-language digital information display.
Blower	1250 CFM (35.4 CMM) @ 14 psi (96.5 kPa)
Empty Weight (Includes Hose Reel with Hose)	**MBX10:** 13,230 lbs. (6,001 kg) **MBX16:** 14,050 lbs. (6,373 kg) **MBX22:** 14,870 lbs. (6,745 kg)
Working Weight*	**MBX10:** 21,740 lbs. (9,861 kg) **MBX16:** 27,666 lbs. (12,549 kg) **MBX22:** 33,592 lbs. (15,237 kg)

Material Blower Disclaimers

* Working weight is based on a full load of mulch at 851 lbs./yd^3

MBH6

Tier IV Final

Skid Mount Only

Capacity	6 cubic yd. (4.6m^3)
Application Rate/Hour	Two operators: 15 Cubic yards/hour
Hose Reel Capacity	150ft. (45.7m) of standard 4" diameter hose
Power	Yanmar 4TNV98C (3.3L) Tier 4 Final Diesel, 72 HP (53.7 kW)
Blower	725 CFM @ 12 psi (20.5cmm @82.7kPa)
Empty Weight (Includes Hose Reel with Hose)	7,500 lbs. (3,402 kg)
Working Weight*	12,575 lbs. (5,704 kg)

MB50

Tier IV Final

Available in Trailer

Capacity	5 cubic yd (3.8m^3)
Application Rate/Hour	Two operators: 15 Cubic yards/hour
Hose Reel Capacity	150ft. (45.7m) of standard 4" diameter hose
Power	Cummins QSF 2.8 Diesel Tier 4F, 65hp (48 kW)
Blower	725cfm @ 12 psi (20 cmm @ 88 kPa)
Empty Weight	8,835 lbs. (4,007 kg)
Working Weight*	12,585 lbs. (5,708 kg)

BB302

Tier IV Final

Available in Trailer

Capacity	1.5 cubic yd (1.2m^3)
Application Rate/Hour	Two operators: 10 Cubic yards/hour
Hose Reel Capacity	100ft. (30.5M) of standard 4" diameter hose
Power	Yanmar 3TNV88C-DYEM, 35.1hp (26.2 kW), 3 cylinder water cooled diesel engine. Tier 4Final 1.642L
Blower	500 cfm @ 10 psi (14 cmm @ 69 kPa)
Empty Weight	5,350 lbs. (2,427 kg)
Working Weight*	6,475 lbs. (2,937 kg)

Straw Blowers

FINN Straw Blowers multiply your productivity and profits by doubling straw coverage in a fraction of the time it takes to apply by hand. There's no more efficient way to ensure soil moisture retention and protect against erosion damage to freshly seeded areas.

Designed to deliver smooth, reliable power for maximum straw shredding and discharge, FINN Straw Blowers make quick work of straw mulching even in the most demanding conditions. FINN offers a technologically advanced line of Straw Blowers to handle jobs ranging from small lawns to massive mining sites.

Your FINN Straw Blower will keep you busy earning profits with numerous applications, including: Seed Protection, Soil Stabilization, Mud Control, Pipelines, Agriculture, and Erosion Control.

B230

Tier IV Final

Available in Trailer

Application Rate/Hour	20 tons/hour
Range	90 ft. (27.4 m) in still air
Power	72hp (53.7 kW) Yanmar 4TNV98CT-NVT turbo charged diesel with over-center clutch.
Blower	Dynamically balanced, 30" (76 cm) diameter fan with 6 blades developing a velocity greater than 185 mph (298 kph)
Weight	4,760 lbs (3,584 kg)

B70

Tier IV Final

Available in Trailer or Skid Models

Application Rate/Hour	6-7 tons/hour
Range	60 ft. (18 m) in still air
Power	Yanmar 3TNV88C-DYEM, 35.1hp (26.2 kW), 3 cylinder water cooled diesel engine with over-center clutch. Tier 4Final. 1.642L
Blower	Dynamically balanced, 21" (53 cm) diameter fan with 6 blades developing a discharge velocity greater than 150 mph (240 km/h)
Weight	**B70S:** 1,700 lbs. (771 kg) **B70T:** 2,360 lbs. (1070 kg)

B40

Electric start

Available in Trailer or Skid Models

Application Rate/Hour	4 tons/hour
Range	Up to 45 ft. (13.7 m)
Power	Kohler CH640, 20.5 hp (15.3 kW), electric start
Blower	17" (43 cm) diameter fan with 6 blades
Weight	**B40S:** 565 lbs. (256 kg) **B40T:** 1,165 lbs. (528 kg)

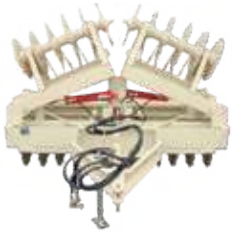

	16 Ft. Wheeled Hydraulic Krimper	**Model 6 ft. and 8 ft. 3-point hitch** **Model 8 ft. wheeled hydraulic**
Coulter Blades	1/4" (.64cm) x 20" (50.8cm) notched design, evenly spaced 8" (20.3cm) apart with scrapers to clean blades.	1/4" (.64 cm) x 20" (50.8 cm) notched design, evenly spaced 8" (20.3 cm) apart with scrapers to clean blades. 6 ft. (1.8 m) model has 9 blades, and 8 ft. (2.4 m) model has 12 blades.
Ballast Boxes	2 boxes constructed from 3/16" (.48cm) steel (with drain holes) for carrying auxiliary weight.	2 boxes constructed from 3/16" (.48 cm) steel (with drain holes) for carrying auxiliary weight
Axels	1" (2.5cm) square carbon steel gangbolt with locking nut and tension washers.	1" (2.5 cm) square carbon steel gangbolt with locking nut and tension washers. Split axle on 8 ft. (2.4 m) model.
Towing Frame	"A" frame towing tongue with adjustable axle pivoted on Krimper frame. Hydraulic cylinder for raising and lowering Krimper. 14" (35.6cm) x 5" (12.7cm) rims.	
Weight	3,300 lbs. (1,500 kg)	**6 ft. 3-point:** 1,200 lbs. (544 kg) **8 ft. 3-point:** 1,500 lbs. (680 kg) **8 ft. Wheeled:** 1,800 lbs. (816 kg)

Ground Prep

FINN ground preparation attachments are multi-use attachments engineered to clear terrain, de-compact and level soil in preparation for seedbed planting. They are available for Skid Steers, Mini Skid Steers and Tractors.

Scarifiers work in combination with the finish and leveling rakes to prepare the soil up to 6” deep depending on the model. Different sizes and models are available to match your equipment and the size of jobs you typically take.

TRACTOR ATTACHMENTS

PRO FEATURES

- Hydraulic Scarifers

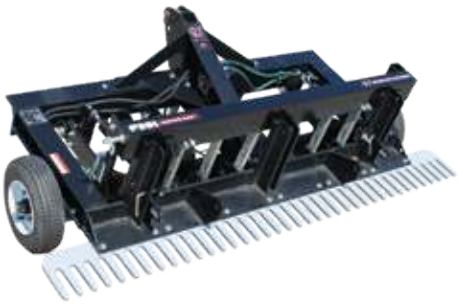

GT PRO SERIES

Hydraulic - Ground Preparation Attachment

Tractor

Model	GTH65	GTH75	GTH85-1	GTH85-2
Recommended HP Range	24 - 65	35 - 75	48 - 75	48 - 105
Hydraulic Ports Required	Yes (1 Set Min.)	Yes (1 Set Min.)	Yes (1 Set Min.)	Yes (1 Set Min.)
3-Point Hitch Type	Cat 1	Cat 1	Cat 1	Cat 2
Finish Raking Width	78 in.	89 in.	101 in.	101 in.
Grading Width	55 in.	66 in.	77 in.	77 in.
Scarifying Width	45 in.	57 in.	70 in.	70 in.
Scarifier Operation	Hydraulic	Hydraulic	Hydraulic	Hydraulic
Weight	925 lbs.	1100 lbs.	1300 lbs.	1350 lbs.

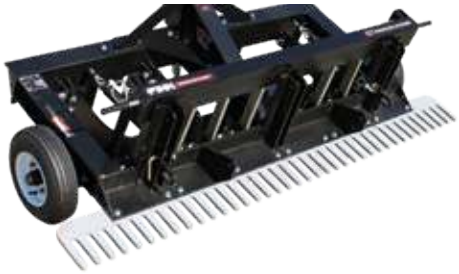

GT SERIES

Ground Preparation Attachment

Tractor

Model	GTM65	GTM75	GTM85-1	GTM85-2
Recommended HP Range	24 - 65	35 - 75	48 - 75	48 - 105
Hydraulic Ports Required	No	No	No	No
3-Point Hitch Type	Cat 1	Cat 1	Cat 1	Cat 2
Finish Raking Width	78 in.	89 in.	101 in.	101 in.
Grading Width	55 in.	66 in.	77 in.	77 in.
Scarifying Width	45 in.	57 in.	70 in.	70 in.
Scarifier Operation	Manual	Manual	Manual	Manual
Weight	925 lbs.	1100 lbs.	1300 lbs.	1350 lbs.

SKID STEER ATTACHMENTS

PRO FEATURES

- Hydraulic
- Leveling Rake
- Gauge Wheels

GS PRO SERIES

GSH75

Hydraulic - Ground Preparation Attachment

Skid Steer

Reccomended HP. Range	40 - 100
Hydraulic Ports Needed	1 Set
Skid Steer Mount	Universal
Raking Width	89 in.
Grading Width	66 in.
Scarifying Width	79 in.
Scarifier Operation	Hydraulic
Weight	1,300 lbs.

GS SERIES

GSM65

Ground Preparation Attachment

Skid Steer

Reccomended HP. Range	30 - 60
Hydraulic Ports Needed	0
Skid Steer Mount	Universal
Raking Width	78 in.
Scarifying Width	66 in.
Scarifier Operation	Manual
Weight	460 lbs

MINI SKID STEER ATTACHMENTS

PRO FEATURES

- Leveling Rake
- Gauge Wheels

GM PRO SERIES

Ground Preparation Attachment

Mini Skid Steer

Model	GM45-3U	GM45-3B
Recommended HP Range	24 - 60	24 - 60
Hydraulic Ports Required	No	No
Mini Skid Steer Mount	Universal	Bobcat
Finish Raking Width	54 in.	54 in.
Grading Width	38 in.	38 in.
Scarifying Width	46 in.	46 in.
Scarifier Operation	Manual	Manual
Weight	540 lbs.	540 lbs.

GM SERIES

Ground Preparation Attachment

Mini Skid Steer

Model	GM45-1B	GM45-1U
Recommended HP Range	24 - 60	24 - 60
Hydraulic Ports Required	No	No
Mini Skid Steer Mount	Bobcat	Universal
Finish Raking Width	54 in.	54 in.
Scarifying Width	46 in.	46 in.
Scarifier Operation	Manual	Manual
Weight	340 lbs.	340 lbs.

Roll-On / Roll-Off HydroSeeder® Sub-Frame

Compatible with truck class 5-7 chassis cab vehicles and designed to work with any 11 or 14 foot Switch-N-Go electric and hydroulic Hoist Systems.

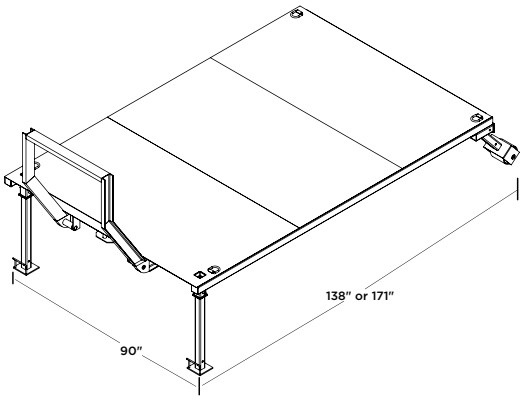

Detachable HydroSeeder® Edition Sub-frame

Legs	(2) Front Retractable Feet (2) Six inch Rear Detachable Rollers with Storage Pockets
Deck	1/8" Diamond Plate Steel
Width	90" Deck Surface
Length	138" for 11.5 Ft. Sub-frame 171" for 14.25 Ft. Sub-frame
Sub-Frame Weight	1,150 lbs 11.5 Ft. Sub-frame 1,450 lbs 14.25 Ft. Sub-frame
Color	Gloss Black

Sub-frame 11.5'
T60S HydroSeeder®
PN - A5558-001

Sub-frame 11.5'
T90S HydroSeeder®
PN - A5563-001

Sub-frame 14.25'
T75S HydroSeeder®
PN - A5562-001

Sub-frame 14.25'
T120S HydroSeeder®
PN - A5564-001

WARRANTY

As the industry leader in Erosion Control equipment, we offer the industry's best warranty on the industries best machines. All Made in America in Fairfield, Ohio.

Warranty Coverage Period:

Hydroseeders & Straw Blowers:	2 years or 2000 hours whichever comes first
Bark Blowers:	1 year or 1200 Hours whichever comes first
Ground Preparation Attachments:	1 Year

The FINN **Dealer Network**

Today, FINN Corporation has a worldwide presence with **more than 175 North American dealer and service locations**, plus others throughout the world. We understand the importance of our dealer network and are careful to select only the finest Dealers for our products. Dealers with the expertise and commitment to excellence in service that has made **FINN the market leader since 1935.**

Your authorized FINN dealer is your source for parts, service and maintenance support. They also provide training, warranty coverage, operator and parts manuals, and have the backing of factory representatives for the most comprehensive support package in the industry. We think it's a Smarter Way to Work.

For our network of international dealers contact Finn at 1-800-543-7166

North American Network
More than 175 dealer and service locations

Visit
finndealers.com
and Find Your Nearest Authorized Dealer

FINN®
SMARTER WAYS TO WORK™

9281 LeSaint Drive | Fairfield, OH 45014-5457
Toll Free 800.543.7166 | 513.874.2818

Follow us on:
www.**FINNcorp**.com
www.**FINNdealers**.com

Form FinnPCFeb2021